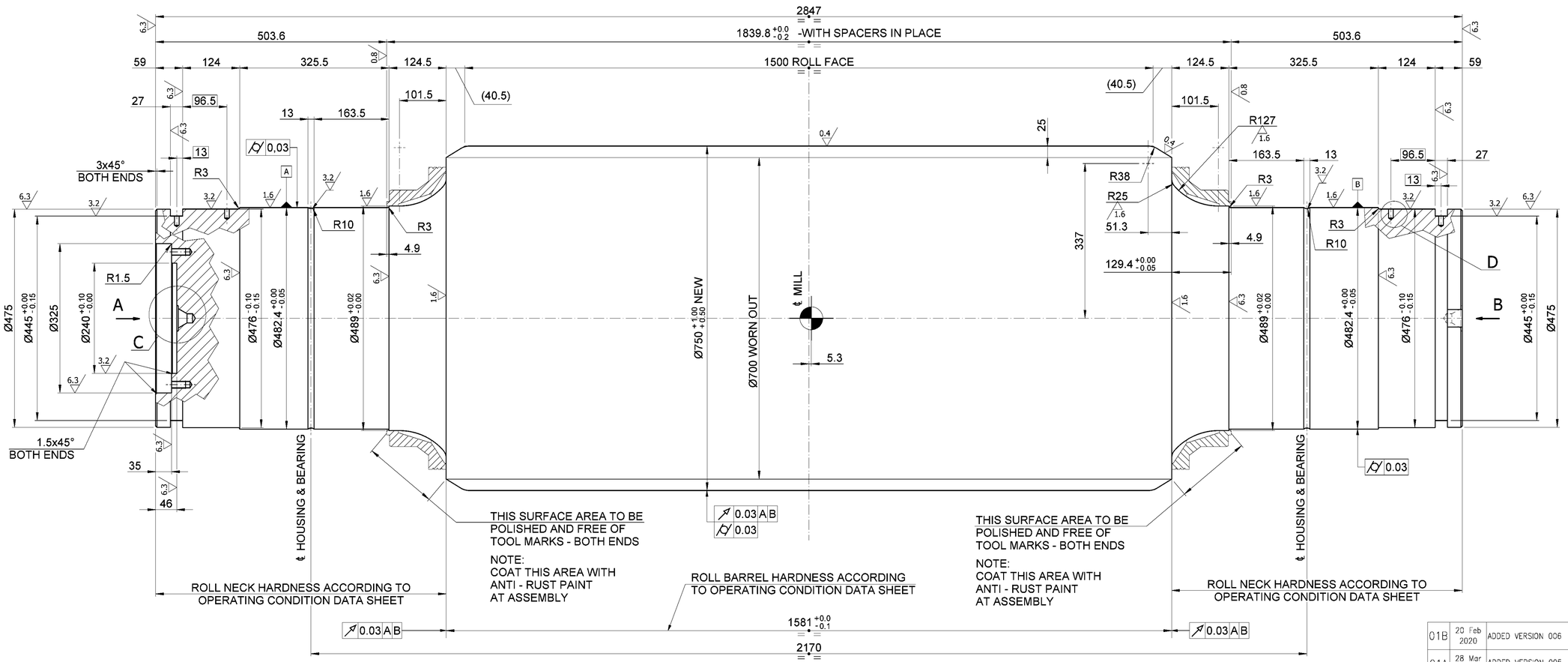

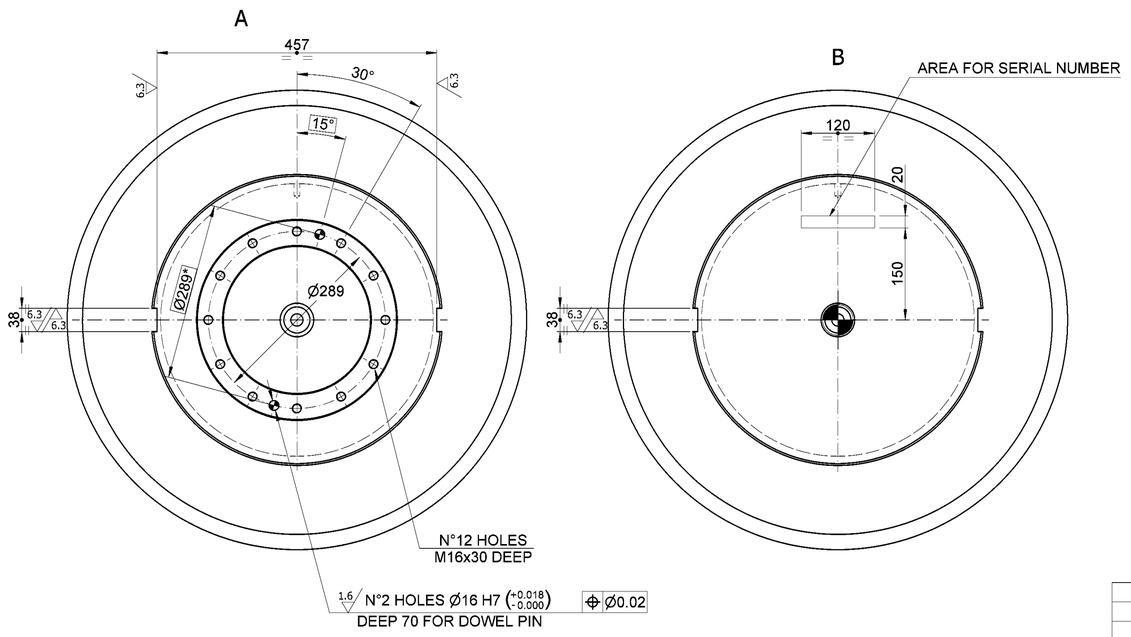

C (1 : 2)
2 PLACES

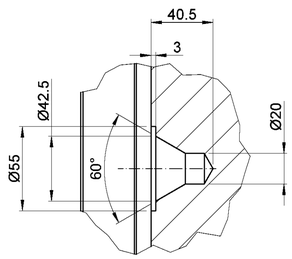

D (1 : 1)
4 PLACES

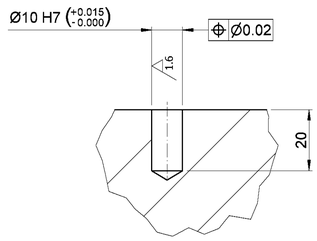

006	7300	40981	6.353063.E
005	7300	40981	6.398767.K
004	7300	40981	6.408061.C
003	7300	40981	6.399592.V
002	7300	40981	6.399809.N
001	7300	40981	6.258196.A
~~5.727299.E~~	~~7300~~	~~40981~~	~~6.258196.A~~
VERSIONS	WEIGHT(Kg)	FAMILY CODE	A (DATA SHEET)

DANIELI STANDARD 2.8.037	A
SPECIFICA APPROVIGIONAMENTO SUPPLY SPECIFICATION	FOGLIO DATI CONDIZIONI OPERATIVE OPERATING CONDITIONS DATA SHEET

Rev.	Date	Revisions description	Drawn by	Checked by	Approved by
01B	20 Feb 2020	ADDED VERSION 006	Thanoy A	Nardini M	Bressan L
01A	28 Mar 2018	ADDED VERSION 005	Heinar K	Nardini M	Bianchin M
01	12 Jul 2016	ADDED VERSION 004	Nardini M	Bresson	Bianchini
00C	10 Mar 2016	ADDED VERSION 003	Mazurk A	Koshyk E	Bianchin M
00B	05 Feb 2016	REPLACED BASE VERSION WITH 001 AND ADDED VER.002	Timjorn R	Bressan L	Bianchin M
00	19 Mar 2015	EMESSO PER COSTRUZIONE / ISSUED FOR CONSTRUCTION	Krajewski	Grama	Nobile

Material 1 (where not indicated on drawing): AS PER SPEC. IN DWG. & STD DAN 2.8.037
State of supply Mat.1 | Danieli Supply Std. | Supply Class | Pattern DB
Material 2
State of supply Mat.2: CASTING | Danieli Supply Std.: 2.8.037 | Supply Class | Casting code
Material 1 Equivalent
Heat Treatment
On Drawing Symbol, if required, —
Coating
On Drawing Symbol, if required, —
Unquoted radius: 0.5 (mm) | Unquoted bevels: 0.5X45 (mm) | Dimensions without tolerance as per: DANIELI STD 2.4.103 | Machinings: 12.5 / 6.3 / 3.2 / 1.6 / 0.8 / 0.4 / | Prec.Class: D | Max.Welding Class
Project Name

DANIELI WEAN UNITED

Job nr
Obtained from 7.079539.B
Replaces
Family code/Machine code: SEE TABLE
Weight (Kg): SEE TABLE | J (Kgm²)

Title: BACK UP ROLL

Scale 1:5
DANIELI Shop number: 5.727299.E
Revision: 01B
Format: A1
Nr. of sheets: 001
DANIELI dwg number
Revision
Sheet: 001 | Follow

Copyright © Danieli & C. Officine Meccaniche S.p.A. 2019 – All rights reserved. CONFIDENTIAL. Property of Danieli & C. Officine Meccaniche S.p.A. Unauthorized reproduction, copying, distribution or any other use of the whole or any part of this documentation is strictly prohibited.

File nr FD12-000-194-186.IDW

COMPUTER AIDED DESIGN – I